SENNHEISER
Service

si 881219-14 e

Ref.:	EM 2003 TV
Fault:	50 Hz hum when the EM 2003 TV receives an RF-carrier without modulation.
Cause:	Insufficient ground connection at HiDyn-IC
Remedy:	Connect ground connection of IC 208.1 to ground connection of IC 224. This will reduce the hum by 6 dB.

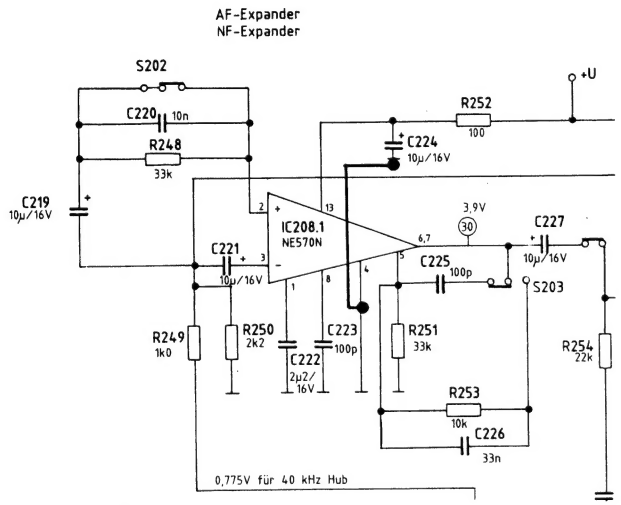

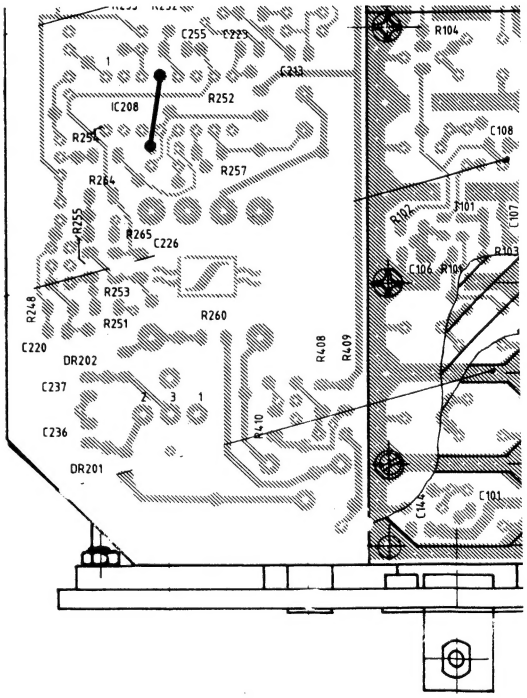

SENNHEISER

Service

19

si 881219-14

Betr.:	**EM 2003 TV**
Fehler:	50 Hz-Brummen bei Empfang eines unmodulierten HF-Trägers
Ursache:	Unzureichende Masseverbindung am HiDyn-IC
Abhilfe:	Massebrücke zwischen C 224 und Pin 4 / IC 208.1 auf Lötseite einbauen. Dadurch wird eine Verringerung des Brummens um 6 dB erreicht.

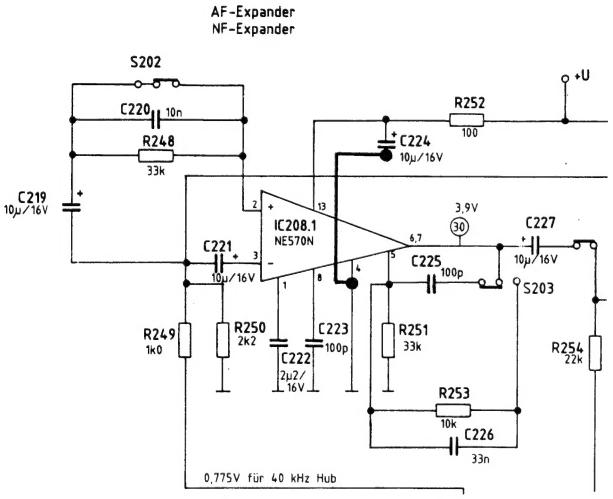

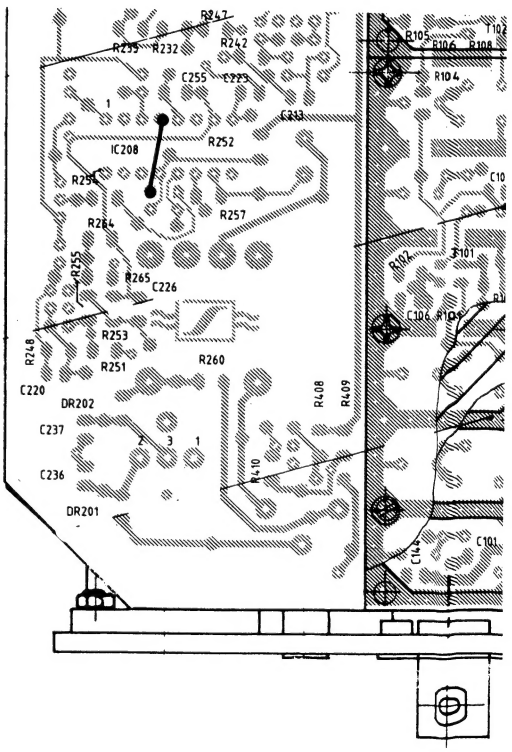

Vorstufe
RF-Pre-Amplifier

Mixer

ZF Verstärker
IF Amplifier

ZF Verstärker-Demodulator
IF Amplifier-Demodulator

NF Verstärker
AF Amplifier

Expander

NF Endstufe
AF Amplifier

Oscillator

Squelch Comparator

Diversity-Comparator

Elektr.-Electronic-Schalter Switch

Spannungswandler Voltage-Converter

Diversity/Squelch-Indicator

Pegel-Anzeige Dev./AF-Indicator

	1	2	3	4,101	102	103	5,6	7	8,9,11	10,104,105	106	111,110,112	113	119	215	116,117	118	120	121	122	124	125,126	128,127	40	41	42	43	44	45	46	47	48	49	50,53	51	
				201	202	61,64,203		62,63	65	204,205		211,210,212	213	219	115	216,217	218	220	15,16,17,18	221	222	19,20,21,22,23,24	224,225,226,227,228,229		30,31,301,302,303		32,33,304,305		35,36	104	37		38		310,308,311,309,312		R
101	102	103,104,1	105,2	3	106,107,4,5,109,8	108	110,7,8,111	112	9	10	113	114	115	116	120,121		124	123	125	126,133,134	130,134,135,137	139	140,141	142	143,144		30,31,32,34		33	35	36	38,39,44		40,41,42,43		
201	52,202	48,49,53,203,204,54,50,51,205			55,206,207	209,56,208	210	211,57,212			213	214	215		220,221		224	223	225	226,233,234	230,234,235,237	239	240,241	242	18,243,244	19,20,21	22	23,24		25,26		27				C

BC 1
BD 544 A

BF 240

BC 548

BF 981
top view

TAA 861A

TBA 820 M
LM 358 N
NE 5534 N
S 761 T

NE 570 N
UAA 170
DG 243 C

UAA 3576

EM 2003
EM 2003 R

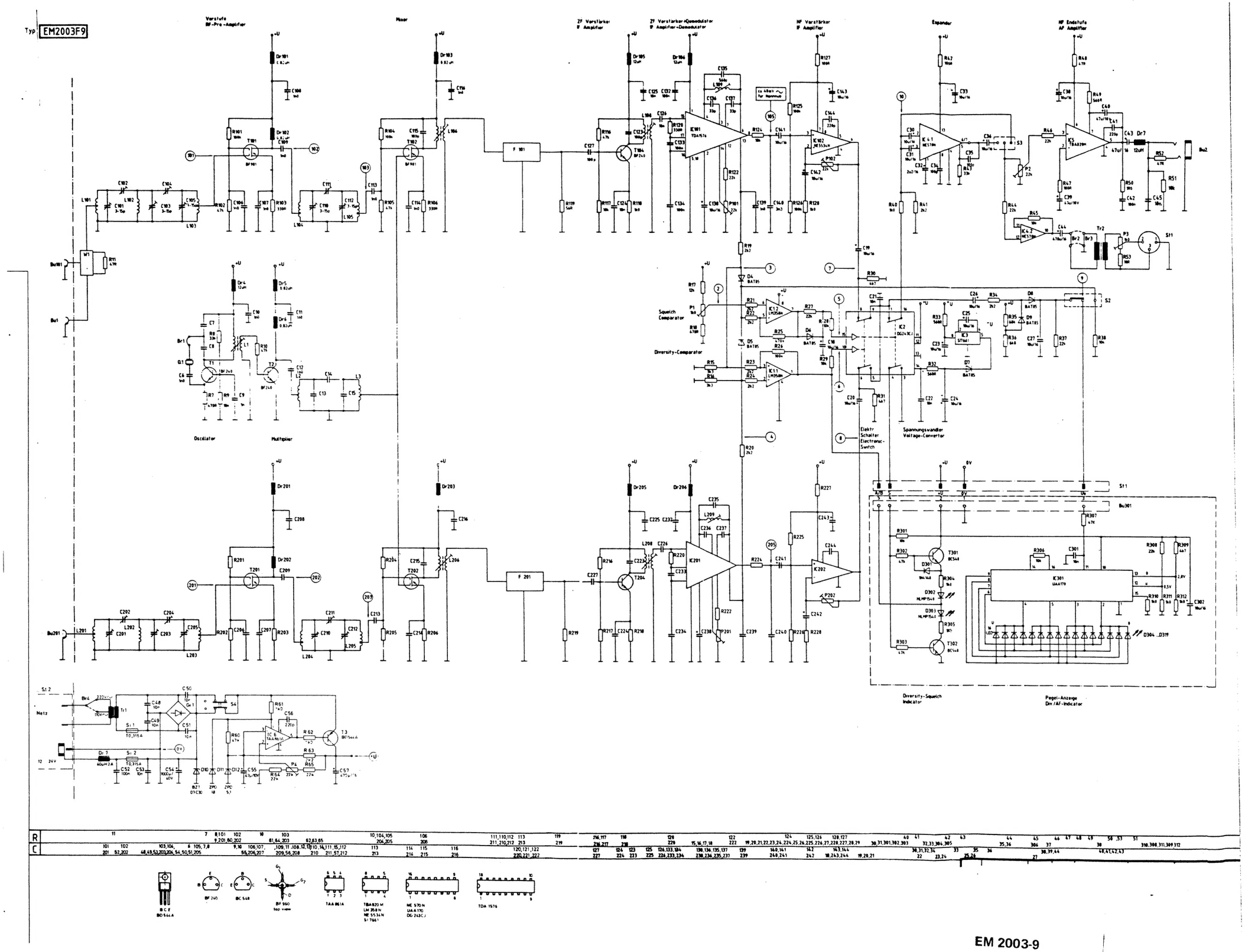
Typ EM2003F9
Vorstufe
RF-Pre-Amplifier
Mixer
ZF Verstärker
IF Amplifier
ZF Verstärker+Demodulator
IF Amplifier+Demodulator
NF Verstärker
IF Amplifier
Expander
NF Endstufe
AF Amplifier
Oscillator
Multiplier
Squelch Comparator
Diversity-Comparator
Elektr. Schalter
Electronic-Switch
Spannungswandler
Voltage-Convertor
Diversity-Squelch Indicator
Pegel-Anzeige
Div./AF-Indicator
Netz
BCE
BD544A
BF240
BC548
BF960
top view
TAA861A
TBA820M
LM358N
NE5534N
S1766
NE570N
UAA170
DG243CJ
TDA1576

EM 2003-9

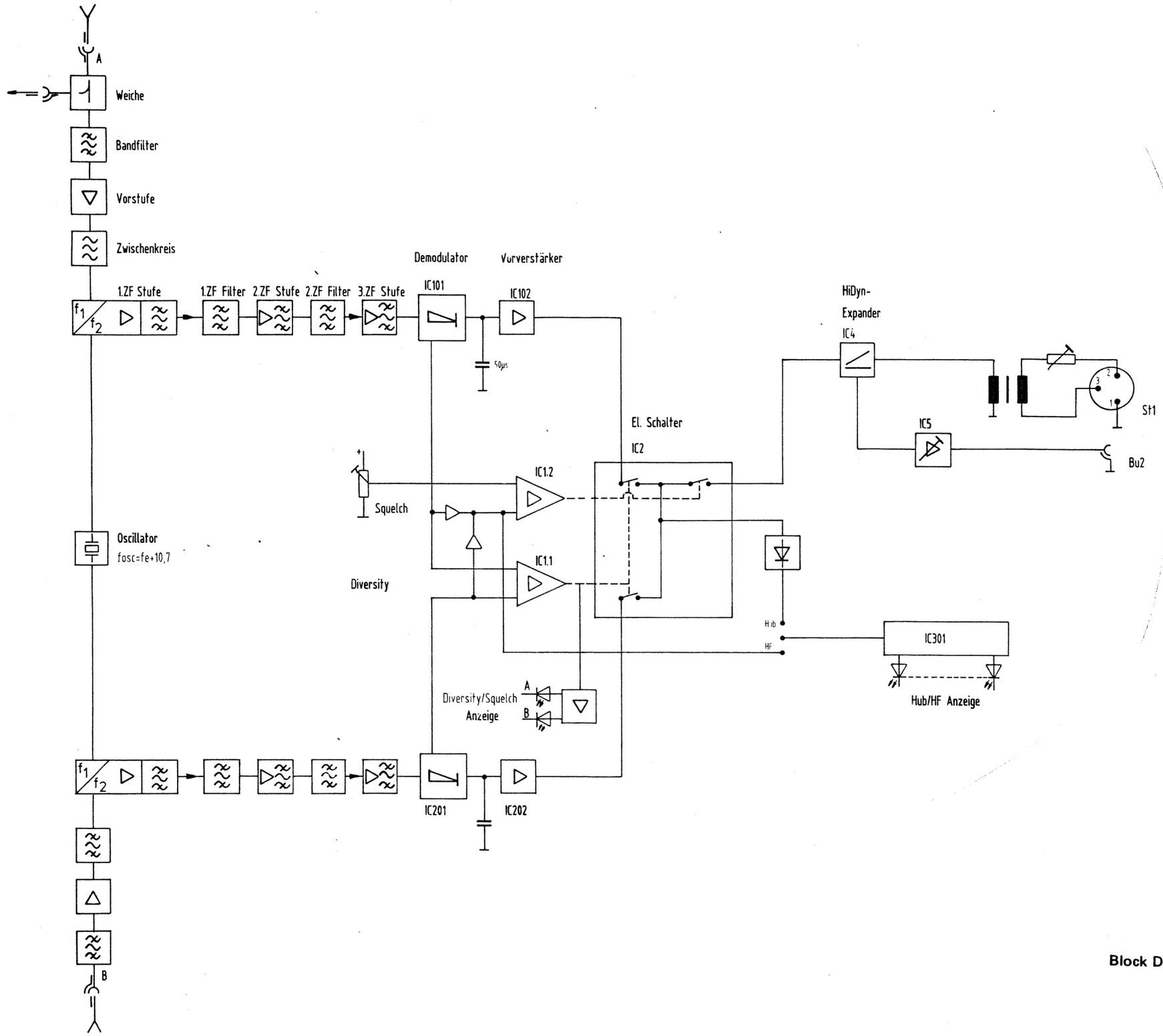

Block Diagram EM 2003

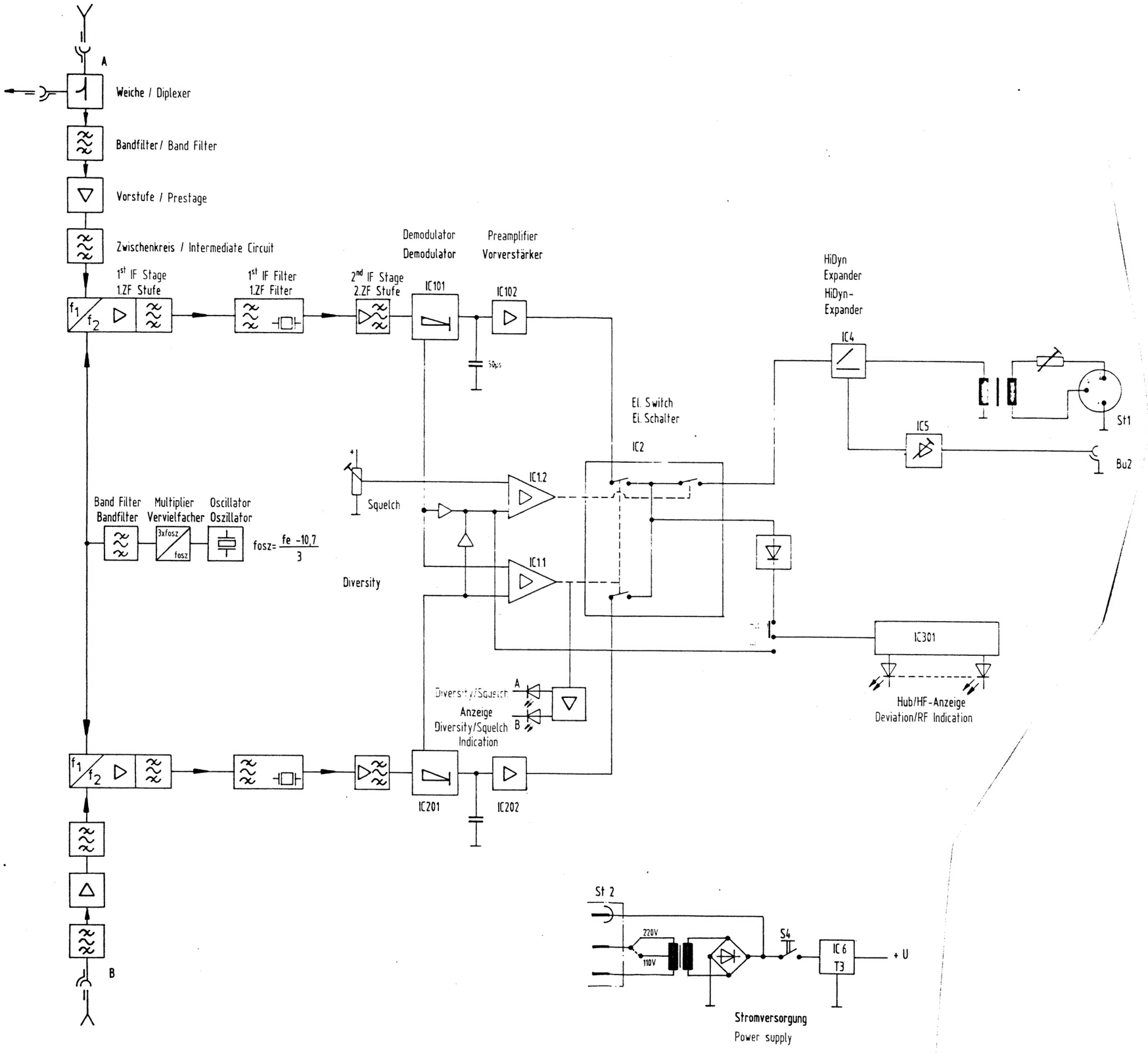

Block Diagram EM 2003-9